MONTEROSA 46"

[NORMAL VERSION]

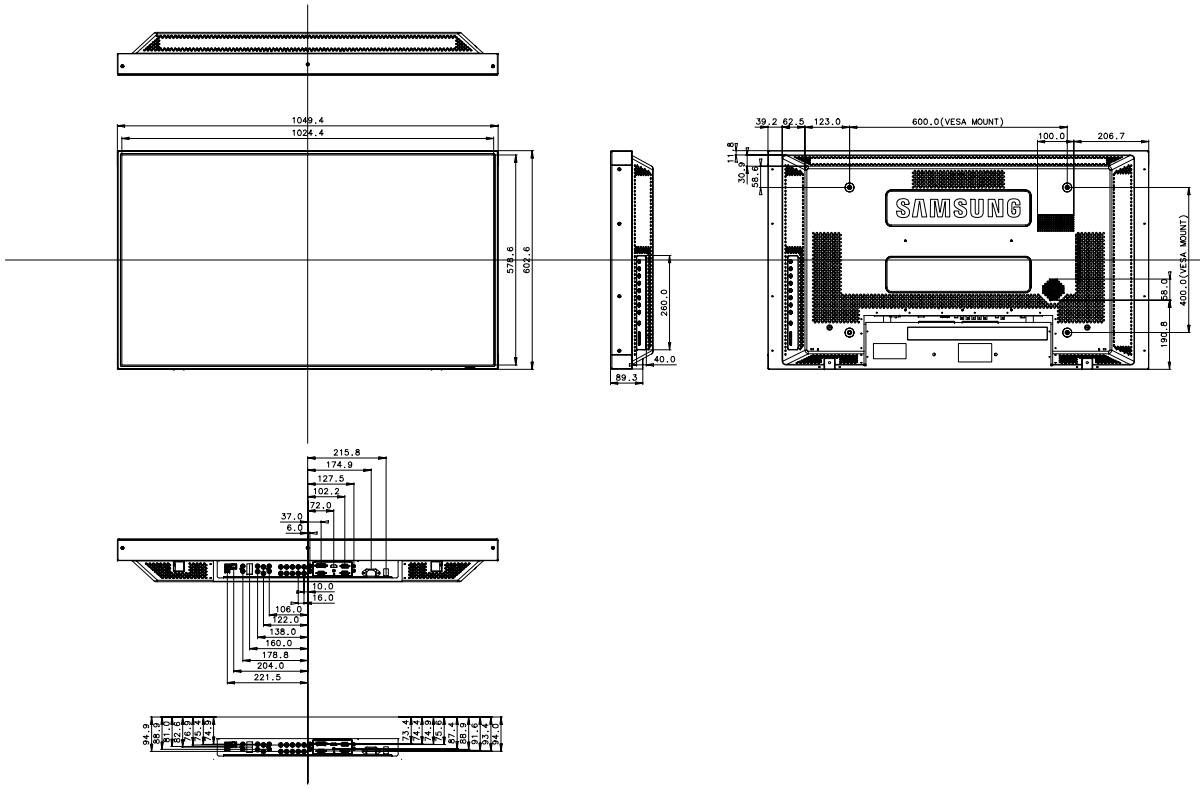
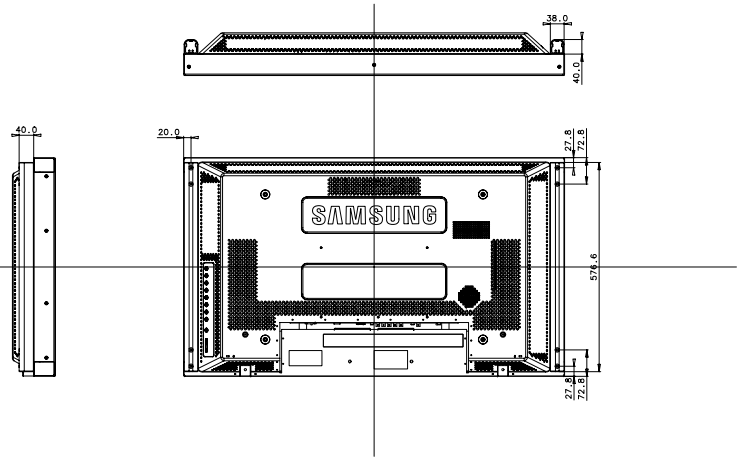
[MATRIX VERSION]