OUTDOOR-KIT DRAWING (NEW)

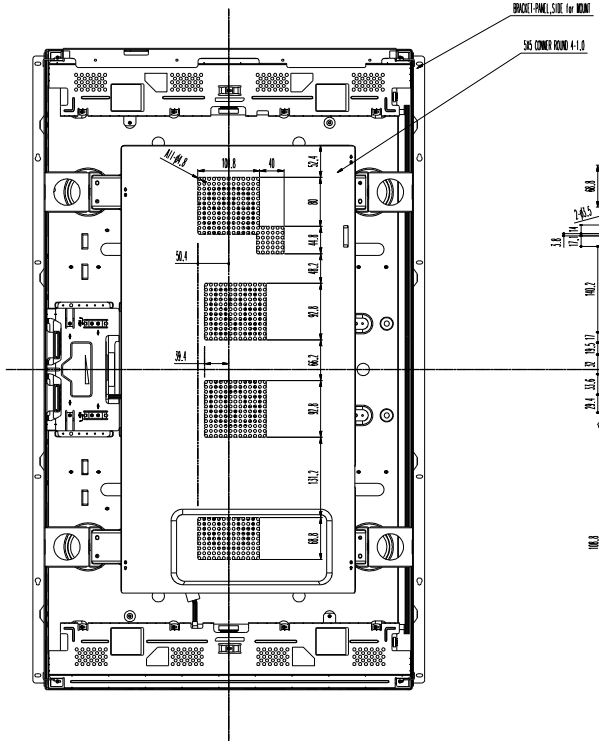

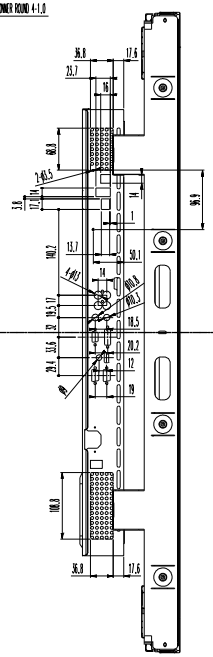

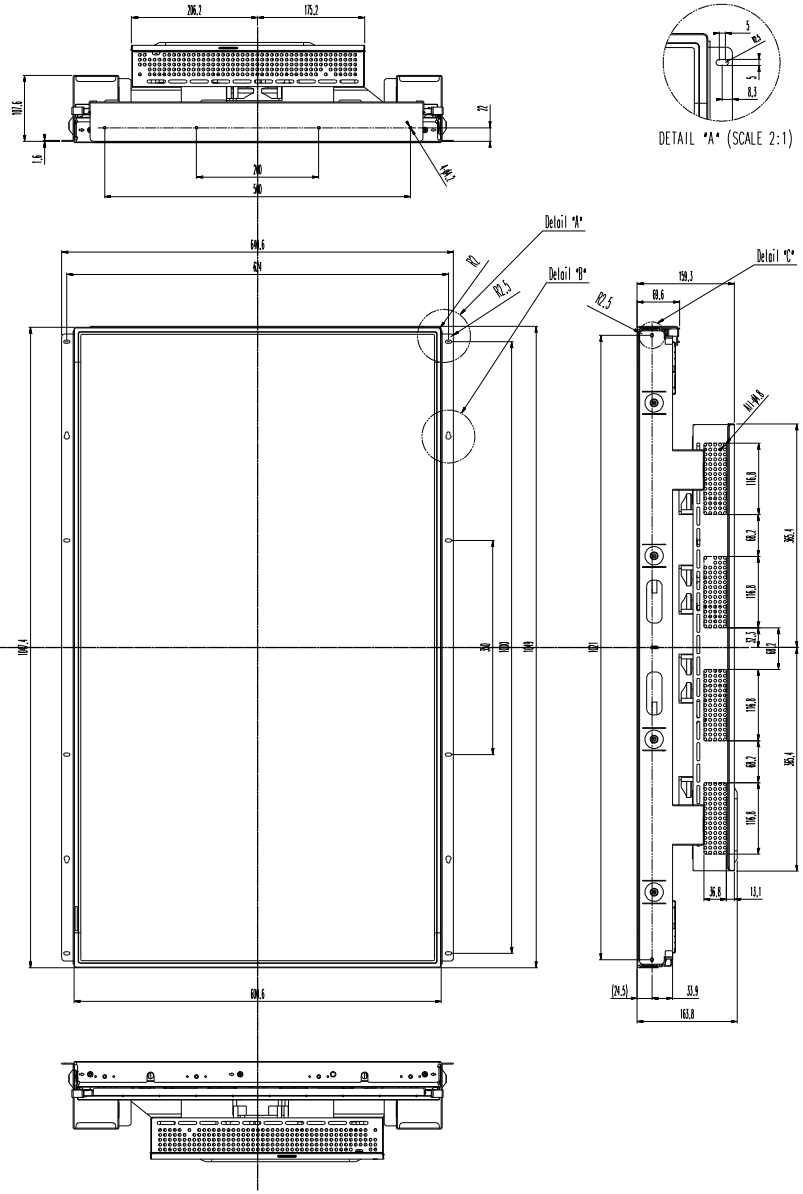

DETAIL "A" (SCALE 2:1)

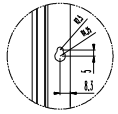

DETAIL "B" (SCALE 2:1)

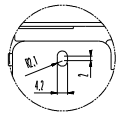

DETAIL "C" (SCALE 4:1)
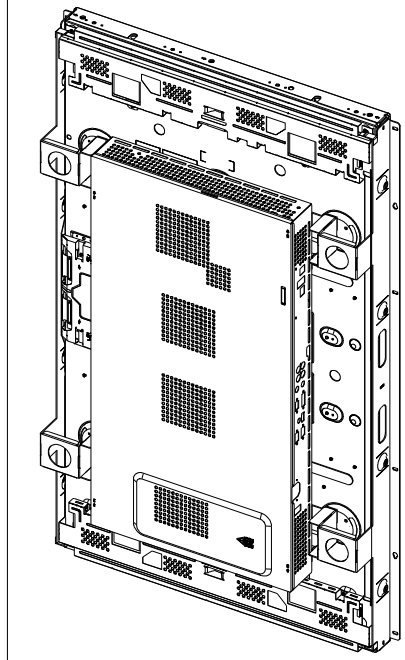
ISO-VIEW